Discussions and Conclusions: The optimal matching and tuning response of the probe includes the frequency of ^{3}He, ^{19}F and ^{1}H at 4.7T. The most recent approach to perform multinuclear images was developed for working at 3T with a coil working at ^{1}H and ^{19}F nuclei frequencies [1].
The use of saddle coil minimizes the number of varicaps in the final configuration and avoids the inclusion of several DC biases allowing a noise reduction. The new design assures high stability and digital noise isolation; it also facilitates autonomous work after preprogramming without the need for introducing an expensive, highly isolated operational amplifier.
The main advantages of the system are time saving and operation versatility, crucial aspects to avoid noble gas depolarization.

References:

1. Muftuler LT, Gulsen G, Sezen KD, Nalcioglu O. J Magn Reson 2002, 155: 39-44.
2. Sugiura S. U. S. Patent 4602213, July 1986.
3. Murphy-Boesch J, Koretsky AP. J Magn Reson 1983, 54: 526-532.

420

Optimized rf-coils with simulations of rat anatomical models

S. Junge; *Mri, RF Development, Ettlingen, GERMANY.*

Introduction: Coil development guided by simulations at high fields for calculating the B1-field distribution in loads, like anatomical models, is very useful for improving and optimizing the coil performance. We present simulation techniques and a rat head anatomical model which are useable for simulations of rf-coils for mapping the absolute B1-fields and their optimizations.

Subjects and Methods: We used moment methods (CONCEPT II [1]) to solve Maxwell's equations in three dimensions with surface coils and a rat model as load fixing the boundary conditions.
Dielectric, lossy bodies are defined by the shapes fixing their boundaries with the material constants found in table 1.

Tissue Avg.	Permittivity	Conductivity [S/m]
Brain	56.064735	0.507771
Skull	19.181932	0.134992
Muscle	60.868004	0.764407

Table 1. Material constants [3]

The coils are introduced by their surfaces with wires including the lumped elements. We used the main tissues muscle, bone and brain, which have an effect for the B1-field distribution in a rat head. Segmented rat MR-Images were used as basic input for the program package vtk [2] to build up triangulated surfaces for the different tissues. In a second step the number of triangles for all surfaces were decimated as much as possible under protection of preserving their topology.
In the past the efficiency of the used methods and techniques and their comparison with measurements [4] were demonstrated. The rat anatomical model was used to make parameter studies for optimizing linear and quadrature surface coils for brain imaging.

Results and Discussion: Different coil sizes from 5mm up to 45mm were simulated as curved shaped designs. The absolute B1-field values of the right hand side (rhs) component of the results were compared and the field distribution over the whole rat brain was weighted for a most homogenous image (figure 1 right). We got the best result with a combination of circular coil and a butterfly coil on a curved shape with a diameter of 34 mm (figure 1 left). This result was compared with measurements of an existing coil with about the same dimensions. These first comparable results are a good basis to start optimizations for array coils.

References:

1. ConceptII TU Hamburg-Harburg
2. Visualization Toolkit, www.kitware.com
3. Camelia Gabriel, Phys. Med. Bio. 41, 1966
4. S. Junge, Seifert, F., Rinneberg, H., *ESMRMB* **19**, 424

Figure 1: Rat model with coil (left) and calculated rhs component of the B1-field (right) of an optimized quadrature surface coil 200MHz

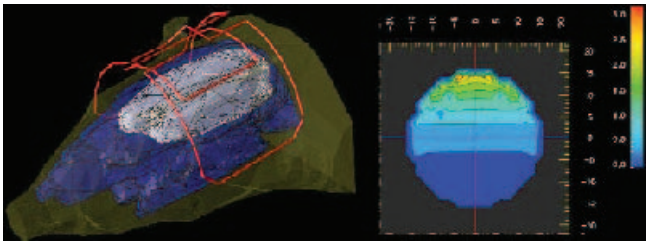

421

RF-receiver coil for lung imaging at 0.15 Tesla

A. Benattayallah[1], J. Owers-Bradely[2], R. W. Bowtell[2];
[1]*Diagnostic Radiology, University Hospital, Philipps University, Marburg, GERMANY,* [2]*Physics and Astronomy, University of Nottingham, Nottingham, UNITED KINGDOM.*

Introduction: The design of the rf coil plays an important role in determining the signal-to-noise ratio (SNR) and hence the quality of the image, particularly at low-field where the coil noise dominates the total noise.
The purpose of this work was to improve the image quality compare to a commercial chest coil (CC), which is a saddle-solenoid qaudrature coil. A highly sensitive elliptical Helmholtz (EH) quadrature receive coil, have been constructed specifically to fit closely around the human chest and to allow registered acquisition of both ^{1}H and ^{3}He images.

Methods: The EH qaudrature coil was constructed applying a combination of an identical pair of EH linear coils (Figure 1 shows the circuit).
Investigations were carried out in a 0.15T permanent magnet (ICG) with a horizontal field direction (perpendicular to patient-axis). This require the used of coil geometry which is different to that used in conventional system.
All proton images were acquired with a 2D-GE sequence. Parameters for phantom images were: 256*256, TR/TE: 200ms/14ms, and FOV 300mm and for the chest images: 128*128, TR/TE: 25ms/5ms, FOV 440mm, and slices 13mm. Additionally, ^{3}He lung images were acquired with a single shot RARE sequence (inter-echo time 18ms, FOV 434mm, and echoes 64)[1].

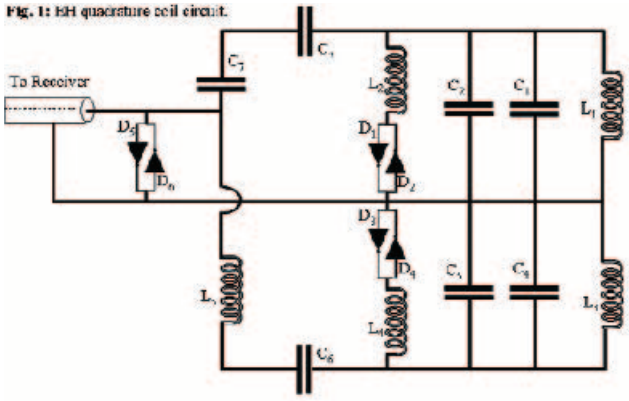

Results: Measurement of the quality factor, frequency shift and input impedance were performed on the workbench, while field distributions and SNR were evaluated in the scanner with a 3 litters cylindrical $CuSO_4$ phantom (0.5g/l). Signal profiles cross images of the phantom (left to right) acquired with the CC and the EH quadrature coils are depicted in Figure 2, showing a clear improvement in MR signal without any homogeneity degradation (the sensitivity of the EH coil was 243% higher than the CC coil). In vivo lung images of a healthy volunteer (registered ^1H and ^3He images in transverse and coronal plane) acquired with EH quadature coil are shown in Figure 3.

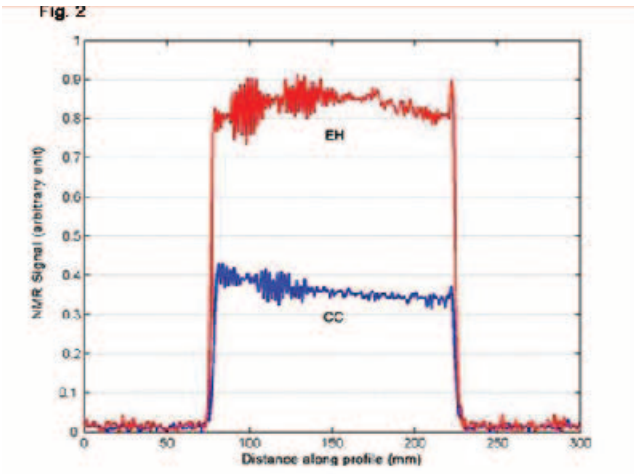

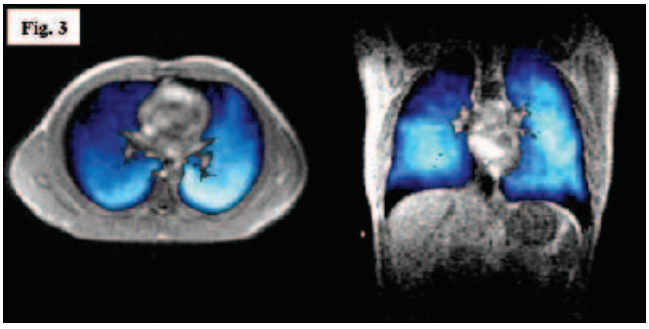

Discussion: The EH coil seems to be a good choice for lung imaging, since its elliptical shape conforms more closely to the human chest contour. Such a coil offers an increase in the sensitivity without suffering from any signal non-uniformity. The EH coil had 180% increase in SNR over the CC coil because of their optimum region of sensitivity, which restrict the amount of anatomy contributing to noise[2], showing a good lung and chest images.

References:

1. C.McGloin et al. ISMRM, Glasgow (2001).
2. J.R.MacFall et al. Radiology, 200;553-558 (1996).

422

Design and testing of a high isolation radio frequency receiver system for pulsed magnetic resonance imaging

C. A. Curto[1], G. Placidi[2], A. Sotgiu[1], M. Alecci[1]; [1]*INFM, Dept. STB, Università dell'Aquila, L'Aquila, ITALY,* [2]*INFM, Centro di Risonanza Magnetica, Università dell'Aquila, L'Aquila, ITALY.*

Introduction: MRI scanners capable of detecting nuclei with very short relaxation times (100 µs or less) require a transmitter (TX) and receiver (RX) system with "zero" dead time. The achievement of this condition depends mainly on the overall *isolation* between TX and RX radio frequency (RF) coils [1]. A receiver system, equipped with a single TX volume RF coil and a double channel, out-of-phase, RX volume RF coils was developed [2]. In the present work, we investigated whether a double channel RX system equipped with RF *surface coils* is effective for achieving high isolation at operating frequency close to 100 MHz.

Methods and Results: The novel system is made of three identical circular loop (diameter 6 cm) RF coils, tuned to f0=100.01 MHz when isolated. The three RF coils were positioned perpendicular to each other and the center-to-center coil distance, between each pair, was 8.5 cm. This configuration permits a open volume access for the sample. Due to the simmetry of the system, two resonant modes were observed (f1=99.4 MHz and f2=101.6 MHz). The lower frequency mode presents a reasonable homogeneous B1 spatial distribution and it can be set to the desired Larmor frequency. This mode is used for high efficiency RF pulse transmission and FID signal detection. Two of the RF surface coils were connected in double channel RX configuration as previously described [2]. The attenuation and phase-shift values of the auxiliary RX channel were adjusted to achieve high isolation at f1. With in-phase RX (summation mode) the measured isolation showed two peaks (f1, f2) with average value of -8 dB. The isolation with out-of-phase RX (subtraction mode) showed a dip of about –66 dB at f1; and at f2 the isolation presented a peak of -19 dB.

Conclusions: We have shown that the double channel RX equipped with surface coils achieves very high isolation at the Larmor frequency. Potential applications of this work are in NMR imaging of solid materials, porous media, and solvent diffusion in solids. Here restricted motion of the probed spins leads to broad lines and very-short relaxation times (100 µs or less). Electron Paramagnetic Resonance (EPR) imaging of paramagnetic probes with ultra-short (10 µs or less) relaxation times is also an important application of the receiver described here.

1. Chen, C. N., Hoult, D. I., Biomedical Magnetic Resonance Tecnology, IOP Press (1989)
2. Alecci M, et al, J. Magn. Reson. 130, 272 (1998)

423

Possibilities and limitations of inductive coil coupling in small sample MRI

H. Graf, P. Martirosian, F. Schick; *Section on Experimental Radiology, University Clinic Tuebingen, Tuebingen, GERMANY.*

Purpose/Introduction: To study the potential of inductive coil coupling for a sample size and field of view (FOV) optimized MR examination of small objects and animals in whole body MR scanners for humans.

Subjects and Methods: Resonant circuits (RC) with solenoid coils of an inner diameter corresponding to a mouse/rat were built from copper wire for varying diameter, length and turns per unit length (N/l). The coils were tuned to the 1H Larmor frequency at 1.5 T with a trim capacitor. Signal and flip angle amplification (tau) as well as the improvement (eta) of the signal to noise ratio (SNR) in the inner of the coils was examined arranging the solenoids at the isocenter of the scanner inside the standard head coil (setup see Fig.1).